NEW CONCEPT OF JET LOOP BIOREACTOR

LADISLAV CHRIAŠTEĽ [a, b], ALI FADAVI [b]

[a]*Department of Biotechnology, Faculty of Natural Sciences, University of SS. Cyril and Methodius, Nám. J. Herdu 2, 91701 Trnava, Slovak Republic*
[b]*Department of Chemical Machines, Faculty of Mechanical Engineering, SUT Bratislava, 81231 Bratislava*

Abstract: In the paper, design of new jet loop bioreactor (JLR) is described. All arrangements of JLR designed hitherto, were with the central tube sparged. But, the literature knowledge and our experience received in tests with AL bioreactors inspired us to design JLR with annulus sparged. Such configuration contributes to the more effective foam liquidation. Hydrodynamic tests and tests with oxygen transfer revealed that the novel bioreactor will be suitable in aerobic waste water treatment.

Key words: Loop bioreactor, Gas-liquid distributor, Hydrodynamics, Mass transfer, Aerobic waste water treatment

1. Introduction

Jet loop bioreactor (JLR) is one type of the loop bioreactors. It consists of column double cylindrical vessel in which a nozzle or a frit, together with pump hydrodynamic effect disperses air bubbles. Two configurations of JLR may be shown in Fig. 1.

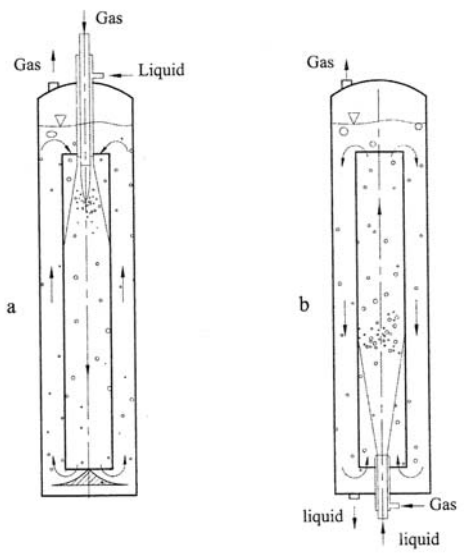

Fig. 1: Configurations of jet loop bioreactors a) downflow, a) upflow,

The first configuration, illustration a), is upflow type where content circulation is due to the combination of two effects - the hydrodynamic, evolved by a pump and the airlift one as a result of density differences in the both bioreactor parts. This reactor was firstly analyzed and searched by BOHNER and BLENKE (1972), and it is convenient for several fermentation productions, e.g. for yeast and organic acids productions but also for degradation technologies, see tower fermenters of Hoechst and Bayer companies (BRAUER, 1985), utilized in aerobic waste water treatment.
The second type, Fig. 1, illustration b, is downflow bioreactor (originally named compact bioreactor) designed by RABIGER and VOGELPOHL (1985). Here, the content circulation is caused by the hydrodynamic pumping effect mainly. This bioreactor was designed primarily for the aerobic waste water treatment.

Our next considerations will be concentrated onto the type 1a) which consists of sparged central tube, operating as riser and an annular space served as downcomer. BOHNER and BLENKE (1972), tested such reactor type equipped with various gas - liquid distributors, located at lower vessel part, and shown in Fig. 2 where their four combination are illustrated.

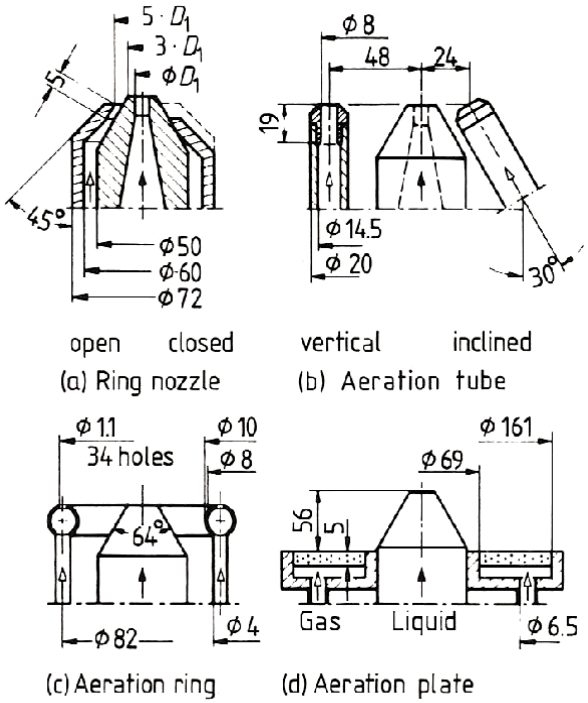

Fig. 2: Arrangements of gas liquid distributors designed by BOHNER and BLENKE (1972)

Main feature of these distributors is high liquid velocity outflowing the jet, which approaches nearly 40 m/s. By such conditions, a very fine bubble distribution is obtained which contributes to the effective oxygen transfer.

In Fig. 3 design of our gas – liquid distributor is given (CHRIASTEL and VAVRIK, 1989). The liquid flowing through central jet with the maximum velocity of 3 m/s, reaches a helical motion caused by static mixer. The air is distributed by ceramic frit and, so nearly the same fine bubble distribution is reached as in the case illustrated in Fig. 2, at significantly lower liquid velocities.

Working volume of our bioreactor was 22 dm^3 and it was tested for hydrodynamics and oxygen transfer (CHRIASTEL and VAVRIK, 1989) and in fermentation production of yeast biomass (CHRIASTEL *et al.*, 1993) and in the aerobic waste water treatment.

The fermentation tests confirmed reliable operation and satisfactorily biomass yields of our bioreactor. Performing aerobic waste water treatment tests, some problems with enormous foaming were observed. Installed mechanical foam killer was not able to suppress it, and therefore it was necessary to add the silicone oil.

That fact inspired us to utilize our experience received during tests in airlift fermenters where an arrangement with the annular part sparged was much more convenient for foam killing. The pressure drop in upper part of the central tube contributes to the better foam liquidation.

Now, a big problem aroused how to find a convenient construction for such gas - liquid sparger because all arrangements of the jet loop reactors (JLR) designed hitherto, were with the central tube sparged. One possibility was to utilize an annular shaped gas distributor with several liquid jets directed into the bioreactor riser part. Finally, we decided to utilize a special two-phase mixer located in the bioreactor lower part (FADAVI, 2004), schematically illustrated in Fig. 4.

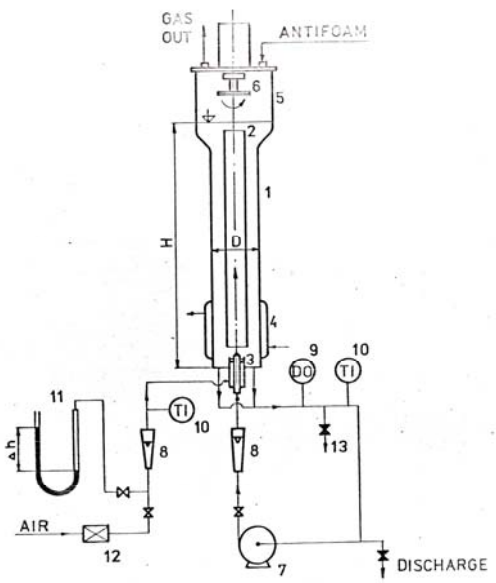

Fig. 3: Design of our JLR.

The sparger consists of static mixer (3), gas distributor (perforated conical part) (4), mixing tube (8), diffuser (10) and guiding cone (9). Basic dimensions of the reactor individual parts are given in Table 1.

The bioreactor individual parts were manufactured by Production Workshop of Faculty of Mechanical Engineering, SUT Bratislava and design of the gas - liquid sparger was announced to Slovak Patent Office as industrial model.

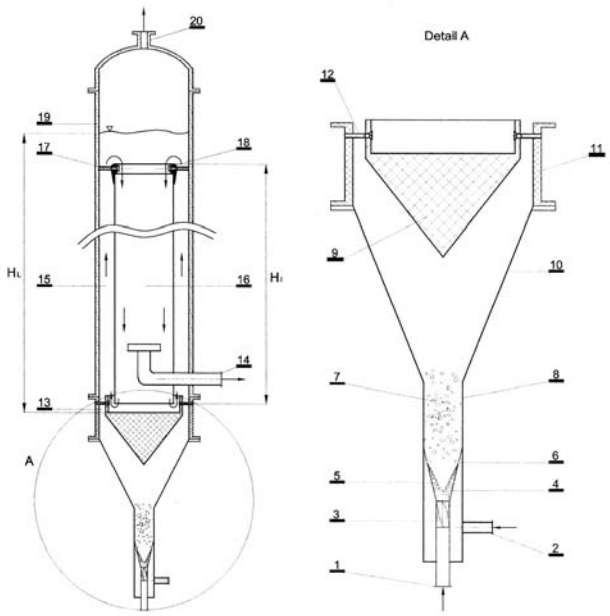

Fig. 4: New concept of JLR, FADAVI, 2004

Table 1: Basic dimensions of the novel JLR

Outer tube diameter	D_C	150 mm
Inner tube diameter	D_I	90/83 mm
Unaerated liquid height	H_L	914 mm
Working volume	V_L	16,3 dm^3
Liquid height to outer diameter ratio	H_L/D_C	=6.18
Ratio of downcomer cross section area to the riser one	A_D/A_R	=0.495
Inner tube length	H_I	=865 mm
Liquid over reach	H_O	=32 mm
Gas hole diameter	d	=1 mm
Gas hole number	n	=4

The liquid and gas phases are introduced to the reactor through the individual passages (1) and (2) respectively. Gas enters the mixing tube via holes (6) located on the conical surface (4). Liquid obtains intensive turbulent motion in the static mixer (3) and this fact supports also fine bubble formation and their nearly uniform distribution, see photo in Fig. 5. So, a theory of the drift flux bubble flow may be utilized for mathematical description of this case

Fig. 5: Photograph of gas bubble distribution

1.1 Relationships for comparison of individual bioreactor types

In order to find out advantages of the novel reactor type, the following conditions and criteria for comparison of the individual reactor types are listed below:

1. Criterion of the specific power for mixing

$$e = \frac{P_G}{V_L} \quad [\mathrm{W/m^3}] \tag{1}$$

where P_G is power for mixing in aerated content, V_L - uneaerated content height

2. Magnitude of overall volumetric coefficient of oxygen transfer

$$K_L a \qquad [1/\mathrm{s}] \tag{2}$$

3. Criterion of oxygen transfer rate OTR

$$OTR = \left[\frac{kgO_2}{m^3 h}\right] \tag{3}$$

4. E – parameter, common in WWT practice

$$E = \frac{OTR}{e} = \left[\frac{kgO_2}{kWh}\right] \tag{4}$$

5. E_m parameter used for evaluation of the bioreactor in simulated conditions

$$E_m = \frac{K_L a}{e} = \left[\frac{m^3 O_2}{J}\right] \tag{5}$$

The specific power for mixing *e [W/m³]* was calculated according to the following expression (6)

$$e = e_{Ge} + e_{Gk} + e_{Lk} + e_{Lp} = \frac{P_G}{V_L} = \frac{1}{V_L}\left[Q_G RT \ln\left(1 + \frac{\rho_L g H_L}{p_t}\right)\right] + \frac{Q_G v_s}{2} + \frac{\pi}{8}\rho_L v_{Ln}^3 + Q_L \Delta p_s$$

The individual symbols in this expression mean as follows:

e_{Gr} is specific power provided by air

e_{Gk} - specific power including gas kinetic energy

e_{Lk} - specific power delivered to liquid by pumping effect

e_{Lp} - specific power due to sparger pressure drop

Q_G	is gas flow rate	[m^3/s]
R	- gas constant	[kJ/(kmol K)]
T	- temperature	[K]
ρ_L	- liquid density	[kg/m^3]
g	- gravity acceleration	[m/s^2]
p_t	- pressure at top part	[Pa]
v_s	- gas velocity in sparger opening	[m/s]
v_{Ln}	- liquid velocity in nozzle	
[m/s]		
Q_L	- liquid flow rate	[m^3/s]
Δp_s	- pressure drop in sparger	[Pa]

2. Measurements

Our measurements were performed in experimental station illustrated in Fig. 6, (FADAVI, 2004). The gas – liquid sparger was mounted in the lower part of the reactor. The reactor vessel consists of four section clamped together to form hermetic unit. Pressure air was fed to the system by laboratory compressor. A pressure regulator, a needle valve and a buffer were fitted upstream of the system in order to enable precise adjustment of the gas flow rate.

Measurements of pressure drops and gas hold ups were performed by pressure transmitter, Rosemount 3051 U.S.A. The pressure gauge signals were transferred into a personal computer within a period of 30 s and with intervals of 1 s.

Bubble diameters were observed at middle of the column height by photographic method. As the photography in Fig. 5 shows, the bubbles were of ellipsoidal shapes, mainly. Therefore, a representative diameter was determined according to the following expression:

$$d_B = \sqrt[3]{x^2 y}$$

where x and y are, respectively, the major and minor axis of the ellipsoid in two-dimensional projection. Then, based on this d_B diameter, the Sauter mean diameter was determined.

Mixing time tests were carried out by the conductivity method, using saturation water solution of sodium chloride (NaCl) as a tracer. Small dosages (2-3 ml) of this

medium were injected into the reactor content and the conductivity signals were transferred through an amplifier to the computer for processing procedure. The mixing times were determined from the condition that relative inhomogeneity is less than 5%.

For oxygen transfer rates two oximeters, Jenway 9300 (Jenway, UK) and WTW 537 (WTW, Germany) together with oxygen electrodes of Clark`s type, giving quick responses, were used. The oximeter signals were transferred to the personal computer which contained a program for K_La evaluation. In all our tests the dynamic gassing out method was used.

The overall volumetric coefficient of the oxygen transfer K_La was determined according to the well-known differential equation valid for unsteady oxygen transfer

$$\frac{dC_L}{dt} = -K_L a\left(C_L^* - C_L\right) \tag{7}$$

where	C_L^*		is relative saturation oxygen concentration in liquid	[-]
	C_L	-	relative actual oxygen concentration in liquid	[-]
	t	-	time	[s]
	K_La	-	overall volumetric coefficient of oxygen transfer	[1/s]

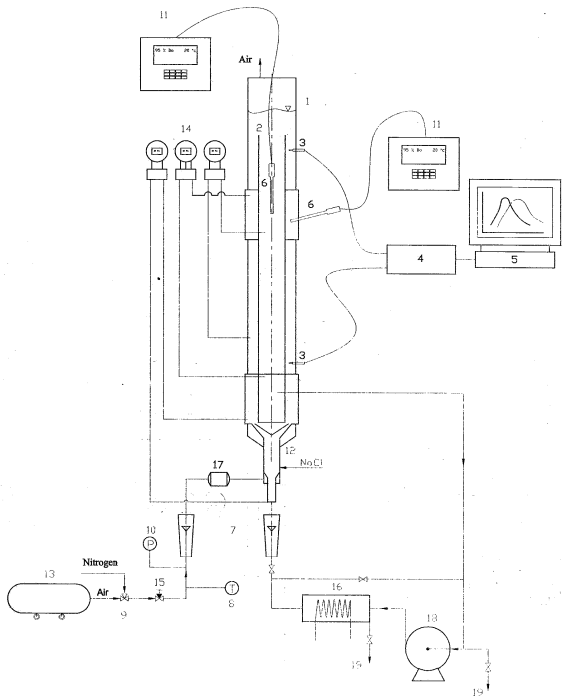

Fig. 6: Schematic diagram of the jet loop bioreactor and ancillary equipment (FADAVI, 2004)
1 reactor body, 2 central tube, 3 conductivity electrode 4 A/D converter, 5 computer, 6 oxygen electrode, 7 rotameters, 8 thermometer, 9 three-way valve, 10 pressure gauge, 11 oximeter, 12 gas liquid sparger, 13 compressor, 14 pressure transmitters, 15 needle valve, 16 cooler, 17 buffer, 18 centrifugal pump, 19 drain valve

3. Results and discussion

Typical bubble size histogram is given in Fig. 7 from which the Sauter mean diameter of 4.6 mm was calculated.

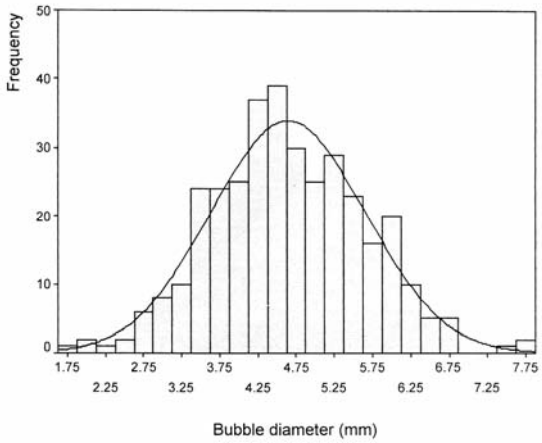

Fig. 7: Histogram of the bubble diameter frequency for liquid flow rate Q_L = 2000 dm^3/h.

Fig. 8 illustrates mixing times vs specific energy consumptions for various liquid flow rates.

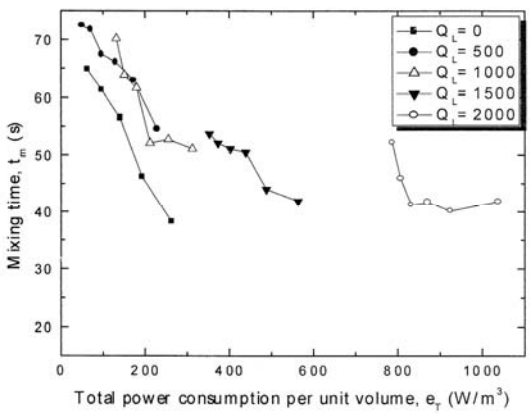

Fig. 8: Illustration of the dependence t_m = f (e)

Hold-up values in the riser section are given in Fig. 9.

Very important parameter, characterizing bioreactor operation, is K_La coefficient. In literature sources many relationships for its determination exist. These expressions correlate the coefficient with various parameters, e.g. specific energy for mixing, gas/liquid flow rates, gas hold-up, etc. Results of our measurement were elaborated into the following equation

$$K_L a = 0.0199 e_T^{0.361} \varepsilon_r^{0.667} \tag{8}$$

and are illustrated in Fig. 10.

Intensive discussions were done on role of the individual reactor parts in the oxygen transfer. Some authors claim that the riser influences dominantly this phenomenon and in order to enhance the circulation velocity in the airlift bioreactors, they install effective gas separator at riser outflow. Another group of authors supposes that also the downcomer contributes very significantly to the oxygen transfer.

In order to find real effect of the downcomer, we located oxygen probes in the both parts of our bioreactor. Results of our measurement confirmed assumption of the second group see Fig. 11. Moreover, it is necessary to take into account also a degree of oxygen utilization in part which is low. Therefore, it is not reasonable to install the mentioned gas separator.

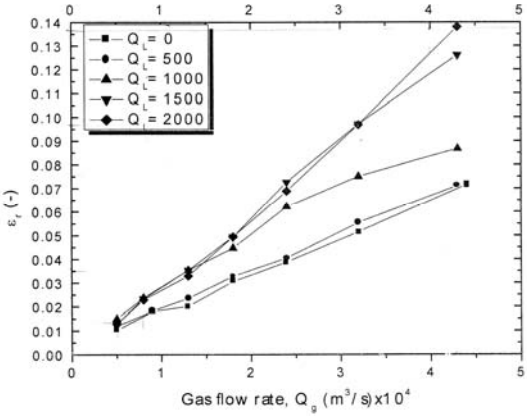

Fig 9: Hold-ups vs gas flow rates, Q_L is parameter

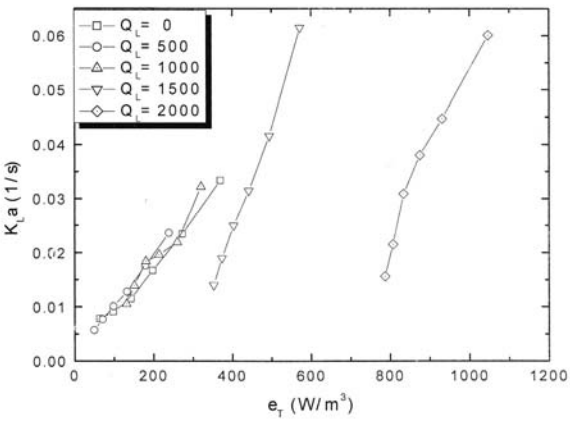

Fig. 10: Coefficient of oxygen transfer vs. specific power consumption

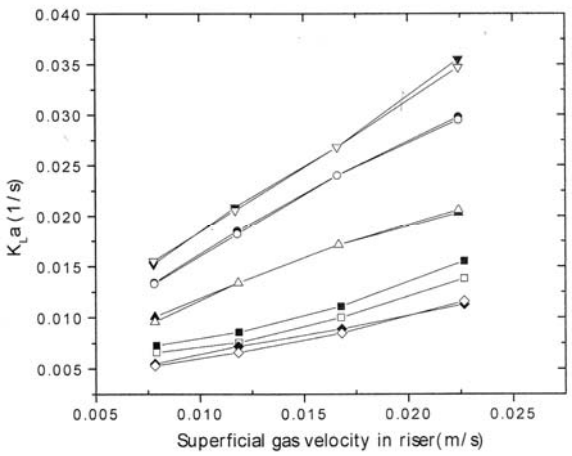

Fig. 11: Oxygen transfer coefficient vs. superficial gas velocity in riser. Full symbols mean values in the riser. The curves from upper to lower parts resp., mean the following liquid flow rates Q_L = 2000 l/h, 1500 l/h, 1000 l/h, 500 l/h, 0 l/h and for the each Q_L magnitude, they have for the both spaces (riser, downcomer) nearly identical values

But, the graph does not give us an objective view as for the proper estimation of operational conditions.

Much more evidence in this problem may be given be application of the parameters E or E_m, respectively, Eqs. (4) and (5). This situation, together with another loop bioreactors comparison, is illustrated in Figs. 12 and 13.

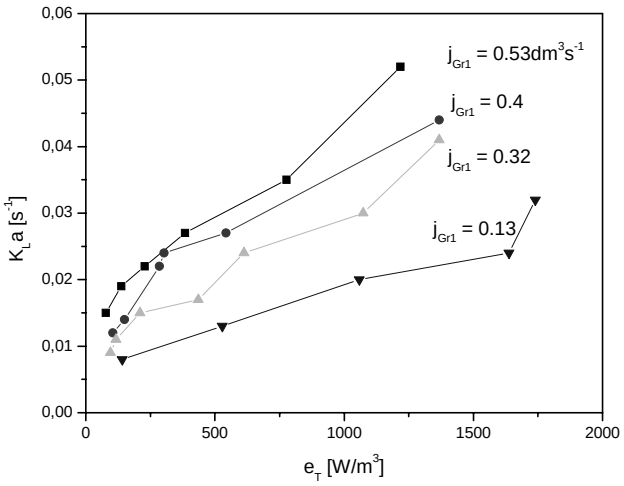

Fig. 12: Oxygen transfer coefficient vs. specific energy consumption for different liquid flow rates

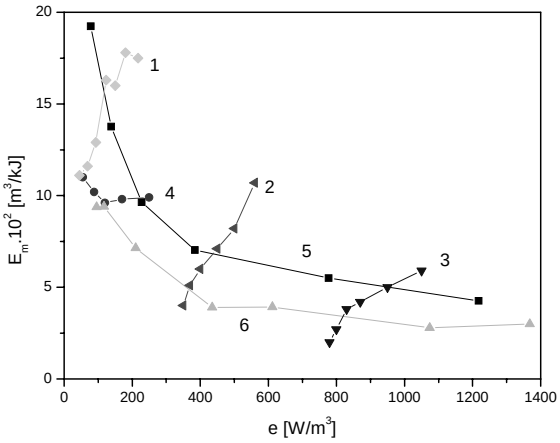

Fig. 13: Comparison of various loop bioreactor types. 1 novel JLR, Q_L = 0.138 dm^3/s Q_G, 2 novel JLR, j_{Lr1} = 0.417 dm^3/s, 3 novel JLR, j_{Lr1} = 0.555 dm^3/s, 4 ALR, 5 mixer with central circulation tube (circulation mixer) Q_G = 0,58 dm^3/s, 6 mixer with central circulation tube (circulation mixer) Q_G = 0,40 dm^3/s

4. Conclusions

Analyzing the graphs, the following statements may be expressed:

A) As for the novel JL bioreactor

- At low liquid flow rates (in the range of 0 – 1000 dm^3/h) E-factor declines with growth of the specific energy consumption.
- At higher liquid flow rates (in the range of 1500-2000 dm^3/h) the situation is opposite. E-factor grows expressionlessly with the energy growth.
- Optimum operation is when the water flow rate Q = 1500 dm^3/h which gives appropriate E-factor values at acceptable energy consumption.
- Liquid flow rate increase over 1500 dm^3 is not convenient because of low E-factor values.

B) As for the circulation mixer (imitation of PLR)

- Here E-factor declines continuously with growth of the energy consumption. Therefore, it is necessary to find optimum value, considering appropriate energy consumption and ensuring solid phase total suspension.

C) As for ALR

- The E-factor course is similar to the course of the circulation mixer

References

BOHNER, K., BLENKE, H.: Gasgehalt und Flussigkeitumwälzung in Schlaufenreaktor, Verfahrenstechnik, 6, 1972, pp. 50 -57.

REHM, H.J., REED, G. (Eds.) Biotechnology Vol. 2, Volume ed. BRAUER, H., VCH Verlagsgesellschaft Weinheim, Graw Hill, New York, 1985, 819 pp.

FADAVI, A.: Transport phenomena in a novel loop bioreactor. Dissertation work. SUT Bratislava, 2004, 85 pp.

CHRIASTEL, L., VAVRIK, E.: Hydrodynamics and Mass Transfer in a Bioreactor stirred pneumatically. Potravinářské vědy (Food Sciences), 1989, pp. 65 – 74. (In Slovak).

CHRIASTEL, L., VAVRIK, E., MASURA, S., STREDANSKY, M., STURDIK, E.: Cirkulačný bioreaktor typu JLR na produkciu kvasničnej biomasy (JL bioreactor for yeast biomass production), Kvasný průmysl (Fermentation Industry) 39, 1993, pp. 7– 9.

CHRIASTEL, L.: Prestup hybnosti a kyslíka v cirkulačných bioreaktoroch. STU Bratislava and UCM Trnava 2005, pp. 65,

RABIGER, N., VOGELPOHL, A.: Der Kompaktreaktor, ein neuentwickelter Schlaufenreaktor mit hoher Stoffaustauschleistung, Chemie Ing. Tech. 55, 1983, pp. 486 – 487.

Nová koncepcia cirkulačného bioreaktora typu „jet loop“

Súhrn: V práci opisujeme konštrukciu cirkulačného bioreaktora pozostávajúceho z dvoch koncentrických valcových rúr kolónového tvaru, v ktorom spojeným účinkom prívodu vzduchu a hydrodynamickým účinkom čerpadla dochádza k jemnej dispergácii vzduchových bublín a zároveň k cirkulácii náplne. Takýto typ bioreaktora sa v angličtine nazýva „jet loop reactor - JLR“, v českej literatúre je známy aj pod názvom bioreaktor s ponorenou dýzou. Dosiaľ známe cirkulačné bioreaktory tohto typu majú prevzdušňovanú stredovú rúru. Avšak poznatky z literárnych prameňov, ako aj naša praktická skúsenosť s bioreaktormi typu „airlift“ nás inšpirovali k návrhu JLR s prevzdušňovaním medzikružia. Takéto usporiadanie prispieva k efektívnejšej likvidácii vznikajúcich pien.

Hydrodynamické testy a testy s prestupom kyslíka poukázali na výhodnosť nového typu bioreaktora, ktorý sa uplatní predovšetkým v aeróbnom stupni čistenia odpadových vôd.

Kľúčové slová: cirkulačný bioreaktor, distribútor plyn – kvapalina, hydrodynamika, prestup látky, aerobné čistenie odpadových vôd